A Power Quality analyser and fault recorder

Model PQI-DA smart

- **DIN-Rail housing**
- **Panel mounting housing**

1. Application

Solving all measurement tasks in electrical grids can be a daunting task. The new Power Quality Interface and Disturbance Recorder *PQI-DA smart*, aimed at low, medium and high voltage grids, represents the A-Eberle response to such needs. This central component can be used either as Power Quality-Interface in accordance with all Power Quality standards or as a device for all physically defined/measured values in typical three-phase systems.

Beside the possibility of standard evaluations, the *PQI-DA smart* also has a high speed fault recorder capability with a 40.96kHz/10.24kHz recording rate and a half cycle r.m.s. registration, which allows for a detailed analysis of grid disturbances.

In particular, *PQI-DA smart* is suitable for monitoring, registering, evaluating and recording special reference quantities or quality agreements between the supplier of energy and the end customer. In addition, the device can provide many measured values in parallel for SCADA applications via standardized interfaces such as Modbus and PQDIF over IEC61850.

Modern voltage quality measuring instruments operate according to the IEC 62586 standard, which describes the complete product characteristic of a Power Quality Analyser. This standard defines not only the purpose of use, the EMC environment, the environmental conditions, but also the exact measurement methods (IEC 61000-4-30) in order to create a comparable basis for the user.

According to IEC 62586, the *PQI-DA smart* is a device PQI-**A-FI-H** and has therefore been fully certified in external laboratories.

Power **Q**uality **I**nterface – Class **A** – **Fi**xed Installed Measurement Device for **I**ndoor operation in **H**arsh EMC environments.

The *PQI-DA smart* meets all demands of the IEC 61000-4-30:2015 Ed 3 +A1:2021) standard for an A-Class device:

Parameter IEC61000-4-30	Class
Power frequency	A
Magnitude of the Supply Voltage	A
Flicker	A
Supply voltage dips and swells	A
Voltage interruptions	A
Supply voltage unbalance	A
Voltage harmonics	A
Voltage interharmonics	A
Mains signalling voltage	A
Underdevation and overdeviation	A
Measurement aggregation intervals	A
Time-clock uncertainty	A
Flagging	A
Transient influence quantities	A

The measuring device and the development are subject to strict security requirements within the scope of the requirements in the area of *KRITIS*. In relation to these, an active patch management, encrypted communication standards as well as a User Rights Management (*URM*) via *RADIUS* are available in the device! This also includes signed firmware updates, security logging and active protection against brute force attacks. All this contributes to a secure operation in your IT environment!

2. Design

The *PQI-DA smart* has been developed for measurements performed within public grids as well as for recording PQ data within an industrial environment up to 690V (L-L) measurement voltage. Its key characteristics, making it suitable for such environments, are:

- No moving parts (fans, hard drives etc.)
- CAT IV
- Extensive storage capability (can be extended up to 32 GB by the user, permitting several years recording without connection to database)

▶ **Optional "IEC61000-4-7 - 2kHz to 20kHz" (B1)**

- Frequency band measurement of voltage and current according IEC 61000-4-7 from 2 kHz to 20kHz.
- Sampling rate of voltage and current inputs 40.96 kHz

▶ **Optional: "PQDIF data format" (F1)**

- Open data exchange format according to IEEE1159-3 via MMS / IEC61850 (feature P2)

2.1 Characteristics of the Power-Quality Interface *PQI-DA smart*

2.1.1 Technical Data

- 1.7-inch colour display
- Keypad for basic/direct device configuration
- 1 GB internal memory
- Input channel bandwidth 20 kHz
- 4 voltage inputs
  FSR: 480V L-N, Accuracy < 0.1%
- 4 current inputs
  - 1A/5A nominal, 500A max current for 1 sec.
  - 1V voltage input for current clamps
- Simultaneous processing of sampled and calculated voltages and currents
- Oscilloscopic voltage and current recorder sampling rate: 40.96kHz / 10.24kHz
- Half cycle recorder:
  power frequency, r.m.s. of voltages and currents, voltage and current phasors, power
  recording rate: ~10ms(50Hz) / ~8.33ms (60Hz)
- Powerful recorder triggering
- Online streaming of voltages and currents at 40.96 kHz sampling rate.
- IEC 61000-4-30, Class A voltage quality processing
- Recording of DIN EN 50160 power quality events
- Spectral analysis 2 kHz…20kHz,(90 frequency bands, BW = 200Hz) of voltages and currents according (IEC 61000-4-7)
- Phase of voltage and current harmonics n=2..50
- 2 general purpose digital inputs (Trigger, Recording Start / Stop, General documentation of level)
- 2 relay outputs for protection monitoring and alarm
- EDGE function - 32 freely configurable monitoring states for monitoring and triggering all measured variables - Output as binary message or via protocol
- Complex analysis software WinPQ lite (sold as a package)
- **As an option**: Analysis of the data on an MYSQL-based database using the WebPQ software package. Permanent communication and evaluation of the data with many devices in parallel.

Communication Protocols
– MODBUS RTU – MODBUS TCP
– IEC60870-5-104 or MQTT (Option P1) – IEC61850 (Option P2) – Modbus Master with IEC60870-5-104 or MQTT (Option P3))

Time synchronisation protocols (Receive / Slave)
– IEEE1344 / IRIG-B000..007
– GPS (NMEA +PPS)
– DCF77
– NTP

Interfaces	
Ethernet	RJ45 (10/100 Mbit)
2 * RS232/RS485 on terminals	switchable

Dimensions	
L x B x H	160 x 90 x 58 mm

Weight	
Weight	502g

Voltage inputs		
Feature	**E1**	**E2**
Channels	U_1, U_2, U_3, $U_{N/E/4}$	
Electrical safety DIN EN 61010	150V CAT II	300V CAT IV 600V CAT III
Input reference level	PE	PE
Impedance -> PE	2 MΩ || 25pF	10 MΩ || 25pF
Nominal input voltage U_{nom}	$100V_{AC}/\sqrt{3}$	230 V_{AC}
Full scale range (FSR)	0…120 V_{AC} L-E	0…480 V_{AC} L-E
Overload, permanent	$150V_{AC}$	$600V_{AC}$
Maximum crest factor @ U_{nom}	3	
Bandwidth	DC…20 kHz	
Nominal power frequency f_n	50 Hz / 60 Hz	
Frequency range of the fundamental	f_n ± 15 % 42.5..50..57.5 Hz 51.0..60..69.0 Hz	
Accuracy		
Fundamental, r.m.s. U1 ≤ 150% U_{nom} 0°C ≤ TA ≤ +45°C: -25°C ≤ TA ≤ +55°C:	 ±0.1% v. U_{nom} ±0.2% v. U_{nom}	
Fundamental, Phase U1 ≥ 10% U_{nom}:	±0.02°	
Harmonics n = 2…50, r.m.s. U_h ≥ 1% U_{nom}: U_h < 1% U_{nom}:	 ±5.0% v. U_h ±0.05% v. U_{nom}	
Harmonics n = 2…50, Phase U_h ≥ 1% U_{nom}:	±0.5°	
Interharmonics n = 1…49, r.m.s. U_{ih} ≥ 1% U_{nom}: U_{ih} < 1% U_{nom}:	 ±5.0% v. U_h ±0.05% v. U_{nom}	
Power frequency	±1mHz @ 10%…200%U_{nom}	
Flicker DIN EN 61000-4-15:2011	Class F1	
Dip residual voltage	±0.2 % U_{nom} @ 10%..100%U_{nom}	

Voltage inputs		
Feature	**E1**	**E2**
Dip duration		±20 ms @ 10 %..100 % U_{nom}
Swell residual voltage		±0.2% Un @ 100 %..150 % U_{nom}
Swell duration		±20 ms @ 100 %..150 % U_{nom}
Interruption duration		±20 ms @ 1 %..100 % U_{nom}
Voltage unbalance		±0.15 % @ 1 %..5 % reading
Mains signalling voltage (< 3 kHz)		±5 % of reading @ U_s = 3 %..15 % Un ±0.15 % U_{nom} @ U_s = 1 %..3 % Un

Current inputs		
Option	**C30**	**C31**
Channels	I1, I2, I3, IN/4	
Electrical safety DIN EN 61010	300V CAT III	
Input type	potentialfrei	
Impedance	≤ 4mΩ	
Nominal input current In	5 A_{AC}	
Full scale range (FSR)	$10A_{AC}$	$100A_{AC}$
Overload capacity permanent ≤ 10s ≤ 1s	 20 A_{AC} 100 A_{AC} 500 A_{AC}	
Waveform	AC, any	
Maximum crest factor @ In	3	30
Bandwidth	25Hz...20kHz	
Tightening torque	2 Nm	

Accuracy		
Feature	**30**	**C31**
Fundamental, r.m.s.	$I_1 \geq 10\%$ FSR: ±0.1% v. I_1 $I_1 < 10\%$ FSR: ±0.01% v. FSR	$I_1 = 1\%...20\%$ FSR: ±0.5% v. I_1 $I_1 < 1\%$ FSR: ±0.005% v. FSR
Fundamental, Phase	$I_1 \geq 10\%$ FSR: ±0.1°	$I_1 = 1\%...20\%$ FSR: ±0.5°
Harmonic n = 2…50, r.m.s. $I_h \geq 3\%\ I_{nom}$: $I_h < 3\%\ I_{nom}$:	 ±5.0% v. I_h ±0.15% v. I_{nom}	 ±10% v. I_h ±0.3% v. I_{nom}
Harmonic n = 2…50, Phase $I_h \geq 3\%\ I_{nom}$:	 ±0.5°	 ±2.0°
Interharmonic n = 1…49, r.m.s. $I_{ih} \geq 3\%\ I_{nom}$: $I_{ih} < 3\%\ I_{nom}$:	 ±5.0% v. I_{ih} ±0.15% v. I_{nom}	 ±10% v. I_{ih} ±0.3% v. I_{nom}

Feature	C40	C44	C45
Full Scale Range (FSR)	$0.35V_{AC}$ @ 50Hz	$0.50V_{AC}$	±5.6V
Impedance	1MΩ	1MΩ	1MΩ
Input type	symmetrisch		
Isolation	basic (SELV)	basic (SELV)	basic (SELV)
External sensors	Rogowski coil, potential free	current clamp, potential free	Hall-Sensor, potential free
Differential overload, permanent	$10V_{AC}$	±15V	±15V
Common mode area	±15V	±15V	±15V
Bandwidth	25Hz…20kHz	DC…20kHz	DC…20kHz
Accuracy			
Grundschwingung, r.m.s. $I_1 \geq 10\%$ FSR: $I_1 < 10\%$ FSR:	 ±0.2% v. I_1 ±0.02% v. FSR	 ±0.1% v. I_1 ±0.01% v. FSR	 ±0.1% v. I_1 ±0.01% v. FSR
Grundschwingung, Phase $I_1 \geq 10\%$ FSR:	 ±0.2°	 ±0.1°	 ±0.1°
Harmonische n = 2…50, r.m.s. $I_h \geq 1\%$ FSR: $I_h < 1\%$ FSR:	 ±5.0% v. I_h ±0.05% v. FSR	 ±5.0% v. I_h ±0.05% v. FSR	 ±5.0% v. I_h ±0.05% v. FSR
Harmonische n = 2…50, Phase $I_h \geq 1\%$ FSR:	 ±1.0°	 ±0.5°	 ±0.5°
Zwischenharmonische n = 1…49, r.m.s. $I_{ih} \geq 1\%$ FSR: $I_{ih} < 1\%$ FSR:	 ±5.0% v. I_{ih} ±0.05% v. FSR	 ±5.0% v. I_{ih} ±0.05% v. FSR	 ±5.0% v. I_{ih} ±0.05% v. FSR

Storage of measured values	
Internal memory	1024 MB
SD memory card	1 GByte to 32 GByte

Binary inputs (BI)		
Feature	**M1**	**M2**
2 binary inputs Range	0 V..250 V_{AC} /V_{DC}	0 V...48 V_{DC}
– H – Level – L – Level	> 35 V < 20 V	> 10V < 5V
Signal frequency	DC ... 70 Hz	DC ... 70 Hz
Input resistance	> 100 kΩ	6.8 kΩ
Electrical isolation	Optocoupler, electrically isolated	
Electrical safety DIN EN 61010	300V	

Binary outputs (BO)	
2 binary outputs	1 x closer 1 x changeover
Contact specification (EN60947-4-1, -5-1): Configuration: Nominal voltage Nominal current Nominal load AC1 Nominal load AC15, 230VAC Interrupting power DC1, 30/110/220 V	 1 x SPST (Single Pole Single Throw) 1 x SPDT (Single Pole Double Throw) 250VAC 6 A 1500 VA 300 VA 6/0.2/0.12 A
Number of switching operations AC1	≥ $60 \cdot 10^3$ electrical
Electrical isolation:	Isolated from all internal potentials
Electrical safety DIN EN 61010	300V

Power Supply		
Feature	**H1**	**H2**
AC Nominal range [V]	100...240	-
AC Operating range [V]	90...264	-
DC Nominal range [V]	110...320	24...60
DC Operating range [V]	100...350	18...75
Power consumption	≤ 10 W < 20 VA	≤ 10 W
Frequency Nominal	50...60Hz	DC
Frequency Operating	40...70Hz	DC
External fuse characteristics	6A B	6A B
Energy storage	2 sec	2 sec

Environmental parameters	Storage and transport	Operation
Ambient temperature: Limit range of operation	IEC 60721-3-1 / 1K5 -40 ... +70°C IEC 60721-3-2 / 2K4 -40 ... +70°C	IEC 60721-3-3 / 3K6 -25 ... +55°C
Ambient temperature: Rated range of operation H1 Rated range of operation H2	---	IEC DIN EN 61010 -25 ... +45°C -25 ... +50°C
Relative humidity: 24h average No condensation or ice	5...95 %	5...95 %
Solar radiations	---	700W/m2
Vibration, earth tremors	IEC 60721-3-1 / 1M1 IEC 60721-3-2 / 2M1	IEC 60721-3-3 / 3M1

Electrical safety	
- IEC 61010-1 - IEC 61010-2-030	
Protection class	1
Pollution degree	2
Overvoltage category mains supply option: H1 H2	 300V / CAT III 150V / CAT III
Measurement category	300V / CAT IV 600V / CAT III
Altitude	≤ 2000m
Protection class	IP 20

Electromagnetic Compatibility
Immunity - IEC 61000-6-5, environment H
Emissions - CISPR22 (EN 55022), class A

According to **IEC61557-12**, the PQI-DA smart corresponds to a PMD type III of class PMD -SD according to Table 2 (indirect current measurement, direct voltage measurement) for low voltage or PMD SS (indirect current measurement, indirect voltage measurement) in climatic category K55.

Thus, a marking according to IEC61557-12 is possible for the measuring device as follows:

PMD SD / K55 / 0.2

PMD SS / K55 / 0.2

Herewith the following accuracies are given:

Measured variable	C40 / C44 / C45	C30 @ 5A	Current clamp Klasse 0.5	Current clamp Klasse 1
Active energy	0.2	0.2	< 1	< 2
Active power	0.2	0.2	< 1	< 2
Reactive energy	< 2	< 2	< 2	2
Reactive power	< 1	< 1	1	< 2
Apparent energy	0.2	0.2	< 1	< 2
Apparent power	0.2	0.2	< 1	< 2
Frequency	< 0.02			
Phase current	0.1	0.1	< 1	< 2
Measured IN	< 0.2	< 0.2	< 1	< 2
Calculated IN	0.1	0.1	< 1	< 2
Voltage	0.1			
Power factor	< 0.5	< 0.5	< 1	< 2
Flicker	5			
Dips and swells	< 0.5			
Voltage interruption	0.5			
Voltage unbalance	0.2			
Voltage harmonics	1			
Voltage THD	1			
Current unbalance	0.2	0.2	< 1	< 2
Current harmonics	1	1	< 2	2
Current THD	1	1	1	1

2.1.2 Mechanical design

The *PQI-DA smart* is mountable on the wall or via its DIN rail housing.

All connections are accessible via Phoenix type terminals. The connections are made by using plug-in/clamping technology, except for the current and voltage inputs.

For the TCP/IP interface one RJ 45-connector is available.

I

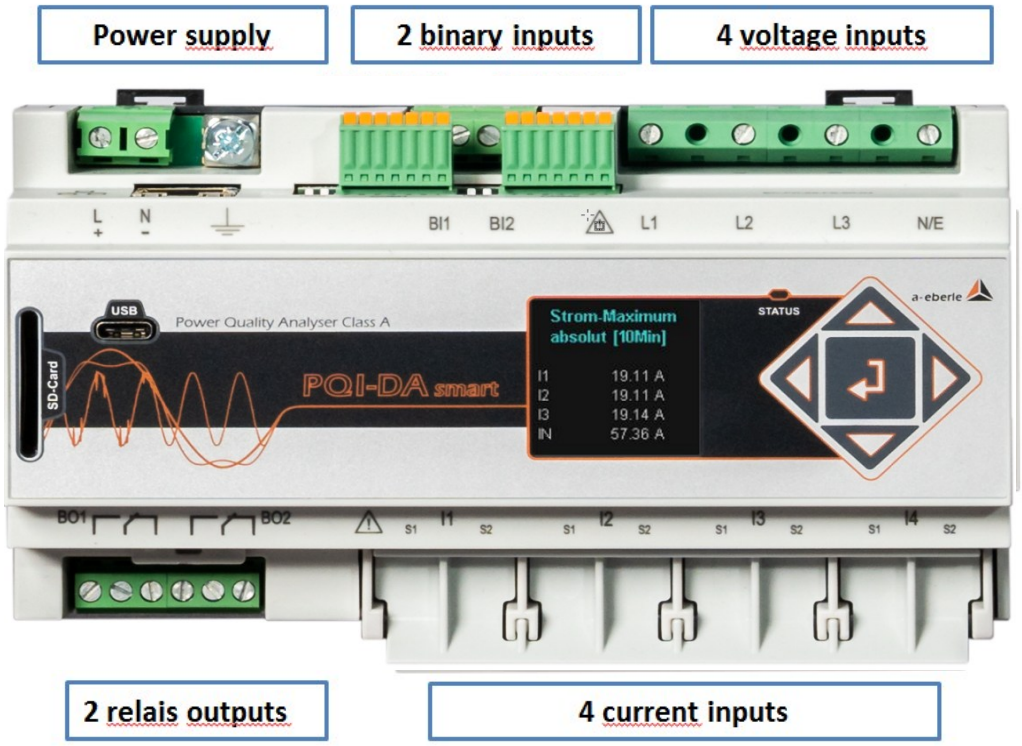

Front view PQI-DA smart

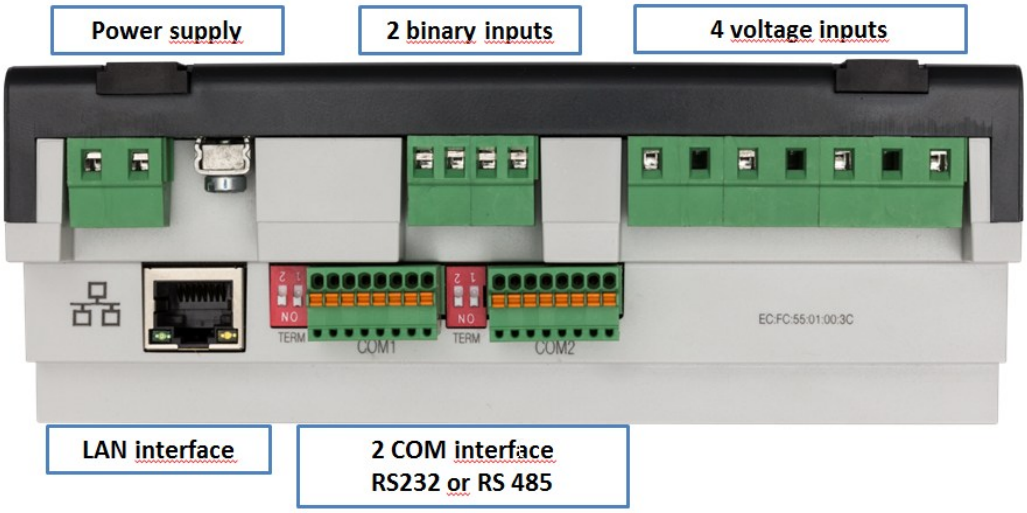

Side view of PQI-DA smart

2.1.3 Terminal strip number PQI-DA smart

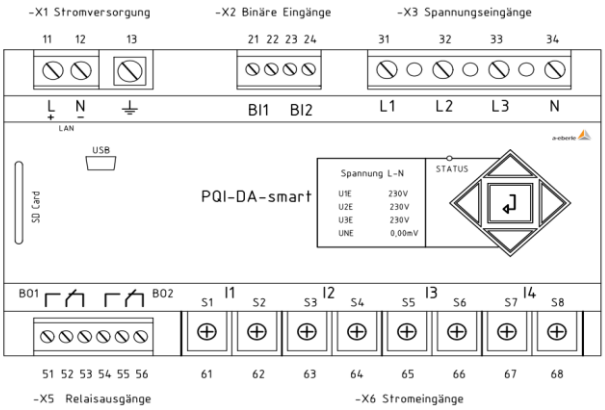

Terminal strip no.	Designation		Function	Terminal no.
X1	Auxiliary voltage	U_H	L (+)	11
			L (-)	12
X1	Ground	GND	E	13
X2	Binary input (M1/M2)	BI1	+	21
			-	22
		BI2	+	23
			-	24
X3	Phase voltage	U_1	L1	31
	Phase voltage	U_2	L2	32
	Phase voltage	U_3	L3	33
	Neutral point voltage	U_4	N	34
X5	Binary output 1	R1	NO contact	51
			Pol	52
			NC contact	53
	Binary output 2	R2	NO contact	54
			Pol	55
			NC contact	56
X6	Phase current L1	I1	S1 (K) S2 (I)	61 62
	Phase current L2	I2	S1 (K) S2 (I)	63 64
	Phase current L3	I3	S1 (K) S2 (I)	65 66
	Neutral conductor / sum current	I4	S1 (K) S2 (I)	67 68

2.1.4 Dimensions

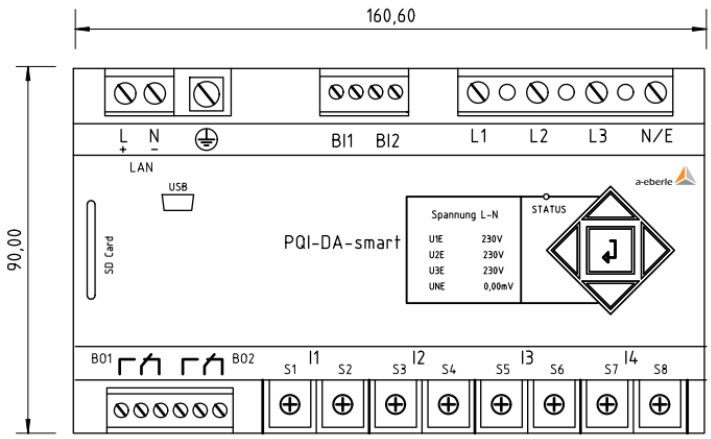

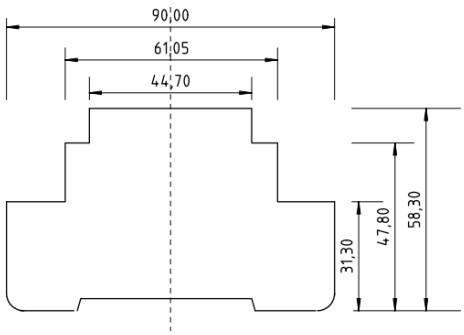

2.1.5 Colour display

The device's 1.7-inch colour display provides information about the correct connections for the measuring cables and current transducers, as well as it indicates online data on voltage, current, THD, power values and energy.

The number of PQ-events that occurred, the oscilloscope records and R.M.S. records for different periods (last day, week or month) are also displayed.

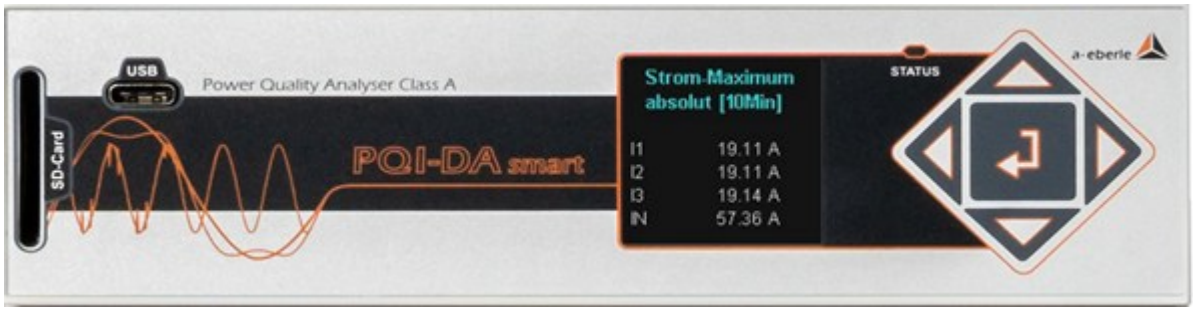

2.2 Measurement / Functions

PQI-DA smart complies with the automatic event detection and measurement standards, which are:

EN50160:2021/ IEC61000-2-2 / IEC61000-2-12 /IEC61000-2-4 (Class 1; 2; 3) / NRS048 / IEEE519 / IEC61000-4-30 Class A Ed 3/ IEC 61000-4-7 / IEC61000-4-15 / IEEE1159-3

Continuous Recording:

Five fixed and two variable measurement time intervals are available for continuous recording:

10/12 T (200ms), 1 sec, n*sec, 150/180 T (3sec), n*min, 10 min, 2 h

Time Interval Voltage	10/ 12T	150/ 180T	10 min	2 h	1 s	10s	N* s	N* min
PQDIF			✓(*)	✓(*)		✓		
Power frequency	✓	✓	✓	✓	✓	✓	✓	✓
Extremes, standard deviation of power frequency (10s)			✓			✓		
r.m.s. values (IEC61000-4-30)	✓	✓	✓	✓	✓		✓	✓
Extremes, standard deviation of T/2-values			✓					
Underdeviation [%], Overdeviation [%] (IEC61000-4-30)	✓	✓	✓	✓				
Harmonic subgroups n= 0..50 (IEC61000-4-7)	✓	✓	✓	✓				
Maximum values of 10/12 T harmonic subgroups n = 2..50			✓					
Interharmonic subgroups n=0..49 (IEC61000-4-7)	✓	✓	✓	✓				
Total Harmonic Distortion (THDS) (IEC61000-4-7)	✓	✓	✓	✓	✓		✓	✓
Partial Weighted Harmonic Distortion (PWHD)	✓	✓	✓	✓	✓		✓	✓
Unbalance, negative-/positive sequence, sequence sign	✓	✓	✓	✓	✓		✓	✓
Unbalance, zero-/positive- sequence	✓	✓	✓	✓	✓		✓	✓
Positive-, negative-, zero sequence phasors	✓	✓	✓	✓	✓		✓	✓
Phasors (fundamental)	✓	✓	✓	✓	✓		✓	✓
Flicker (IEC61000-4-15)			✓	✓				
Instant flicker (IEC61000-4-15)	✓		✓					
Mains signalling voltages [%] (IEC61000-4-30)	✓	✓						
Phase angle (zero crossings) of phase voltage harmonics n=2..50 to fundamental of reference voltage	✓	✓	✓	✓				
Frequency bands 1..90 , 2kHz..20kHz, r.m.s. (IEC61000-4-7)			✓	✓	✓		✓	✓

(*) The following restrictions apply to PQDIF:

- 10 min and 2 h: No phase angles of voltage and current harmonics
- 2 h: No Supraharmonics >9kHz

Time Interval Current	10/ 12T	150 /180T	10 min	2 h	1 s	N* s	N* min
PQDIF			✓	✓			
r.m.s. values	✓	✓	✓	✓	✓	✓	✓
Extremes of T/2-values			✓				
Harmonic subgroups n= 0..50 (IEC61000-4-7)	✓	✓	✓	✓			
Maximum values of 10/12 T harmonic subgroups n = 2..50			✓				
Interharmonic subgroups n=0..49 (IEC61000-4-7)	✓	✓	✓	✓			
Total Harmonic Distortion (THDS) (IEC61000-4-7)	✓	✓	✓	✓	✓	✓	✓
Total Harmonic Currents	✓	✓	✓	✓	✓	✓	✓
Partial Weighted Harmonic Distortion (PWHD)	✓	✓	✓	✓	✓	✓	✓
Partial Odd Harmonic Currents (PHC)	✓	✓	✓	✓	✓	✓	✓
K-Factors	✓	✓	✓	✓	✓	✓	✓
Unbalance, negative-/positive sequence, sequence sign	✓	✓	✓	✓	✓	✓	✓
Unbalance, zero-/positive sequence	✓	✓	✓	✓	✓	✓	✓
Positive-, negative-, zero sequence phasors	✓	✓	✓	✓	✓	✓	✓
Phasors (fundamental)	✓	✓	✓	✓	✓	✓	✓
Phase angle (zero crossings) of current harmonics n=2..50 to fundamental of reference voltage	✓	✓	✓	✓			
Frequency bands 1..90 , 2kHz..20kHz, r.m.s. (IEC61000-4-7)			✓	✓	✓	✓	✓

Time Interval Energy	10 min	2 h	1 s	N* s	N* min
PQDIF	✓	✓			
Active energy, phase	✓	✓	✓	✓	✓
Active energy, total	✓	✓	✓	✓	✓
Exported active energy, phase	✓	✓	✓	✓	✓
Exported active energy, total	✓	✓	✓	✓	✓
Imported active energy, phase	✓	✓	✓	✓	✓
Imported active energy, total	✓	✓	✓	✓	✓
Reactive energy (inductive), phase	✓	✓	✓	✓	✓
Reactive energy (inductive), total	✓	✓	✓	✓	✓
Exported reactive energy (inductive), phase	✓	✓	✓	✓	✓
Exported reactive energy (inductive), total	✓	✓	✓	✓	✓
Imported reactive energy (inductive), phase	✓	✓	✓	✓	✓
Imported reactive energy (inductive), total	✓	✓	✓	✓	✓
Total apparent energies, phase& total	✓	✓	✓	✓	✓
Export apparent energies, phase & total	✓	✓	✓	✓	✓
Import apparent energies, phase & total	✓	✓	✓	✓	✓
Distortion reactive energies, phase & total	✓	✓	✓	✓	✓

Time Interval Power	10	2	1	N*	N*

	min	h	s	s	min
PQDIF	✓	✓			
Active power, phase	✓	✓	✓	✓	✓
Active power, total	✓	✓	✓	✓	✓
Active power extremes	✓				
Reactive power, phase	✓	✓	✓	✓	✓
Reactive power, total	✓	✓	✓	✓	✓
Reactive power extremes	✓				
Apparent power, phase	✓	✓	✓	✓	✓
Apparent power, total	✓	✓	✓	✓	✓
Fundamental active power, phase	✓	✓	✓	✓	✓
Fundamental active power, total	✓	✓	✓	✓	✓
Fundamental reactive power, phase	✓	✓	✓	✓	✓
Fundamental reactive power (displacement), total	✓	✓	✓	✓	✓
Fundamental apparent power, phase	✓	✓	✓	✓	✓
Phase angle of fundamental apparent power, phase	✓	✓	✓	✓	✓
Fundamental apparent power, total	✓	✓	✓	✓	✓
Phase angle of fundamental apparent power, total	✓	✓	✓	✓	✓
Reactive distortion power, phase	✓	✓	✓	✓	✓
Reactive distortion power, total	✓	✓	✓	✓	✓
Active power factors, phase, total	✓	✓	✓	✓	✓
Reactive power factors, phase, total	✓	✓	✓	✓	✓
COSφ + sign, phase, total	✓	✓	✓	✓	✓
SINφ + sign, phase, total	✓	✓	✓	✓	✓
COSφ + sign of reactive distortion power, phase, total	✓	✓	✓	✓	✓
Capacitive-, inductive scaling factor of COSφ (-1..0..+1) :	✓	✓	✓	✓	✓
tanφ (L+), Phase, total on imported inductive reactive energy	✓		✓	✓	✓
tanφ (C-), Phase, total on exported capacitive reactive energy	✓		✓	✓	✓
tanφ (L-), Phase, total on exported inductive reactive energy	✓		✓	✓	✓
tanφ (C+), Phase, total on imported capacitve reactive energy	✓		✓	✓	✓
Triggered interval mean active power, phase					
Triggered interval mean active power, total					
Triggered interval mean reactive power, phase					
Triggered interval mean reactive power, total					

2.3 Oscilloscopic recorder

Sampling rate: 40.96 kHz / 10,24kHz / 1.024kHz

Max. Record length: 4sec (40,96kHz) / 16sec (10,24kHz) / 160sec (1.024kHz)

Quantities	
3-wire system	**4-wire system**
phase – ground voltages	phase –neutral voltages
residual voltage	neutral – ground voltage
phase – phase voltages	
phase currents	
total current	neutral current

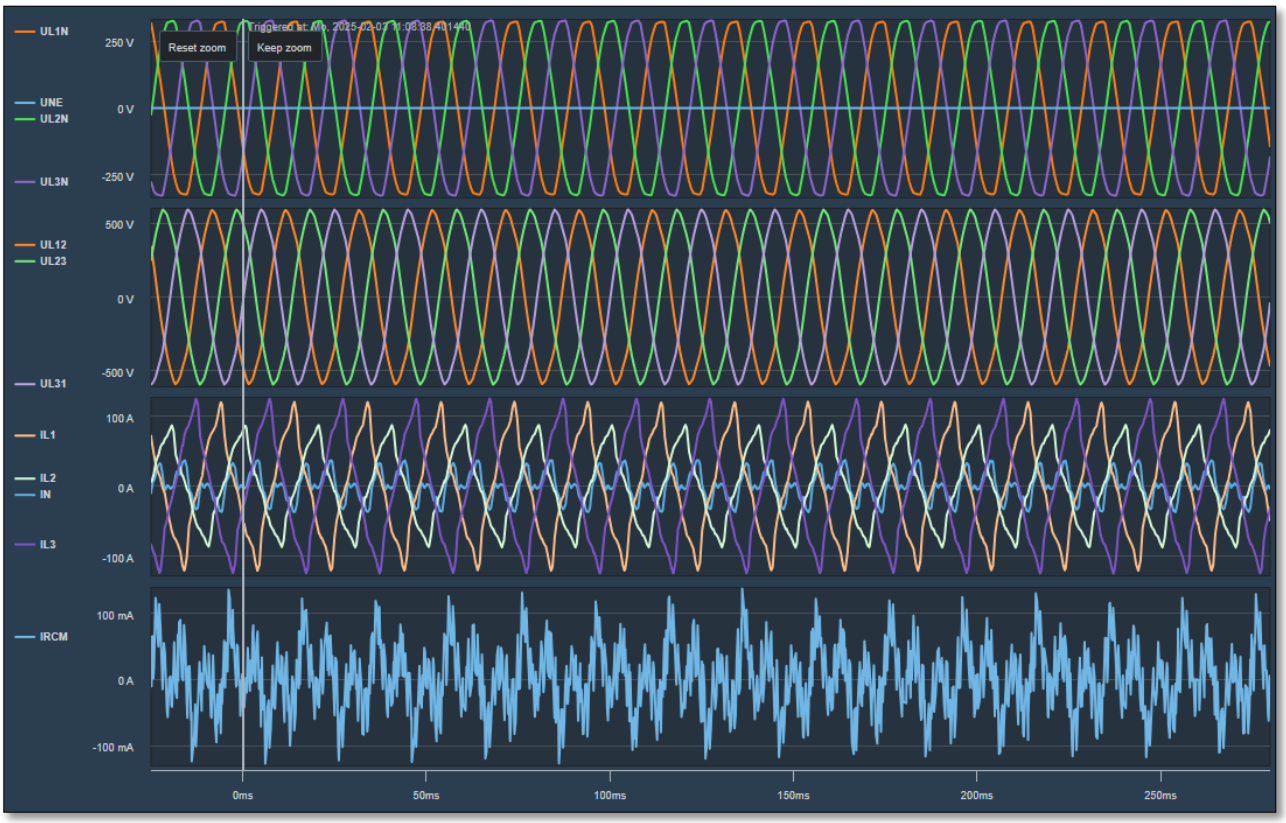

2.4 Half cycle recorder

Recording rate: ~10ms (50Hz) or ~8.333ms (60Hz)

Max. Record length: 6min (50Hz) or 5min (60Hz)

Quantities
Power frequency
r.m.s. voltages
r.m.s. currents
Active power, phase
Reactive power, phase
Active power, total
Fundamental reactive power (displacement), total
Phase angle of fundamental apparent power, total
Voltage phasors (fundamental)
Current phasors (fundamental)
Positive-, negative-, zero sequence voltage phasors
Positive-, negative-, zero sequence current phasors

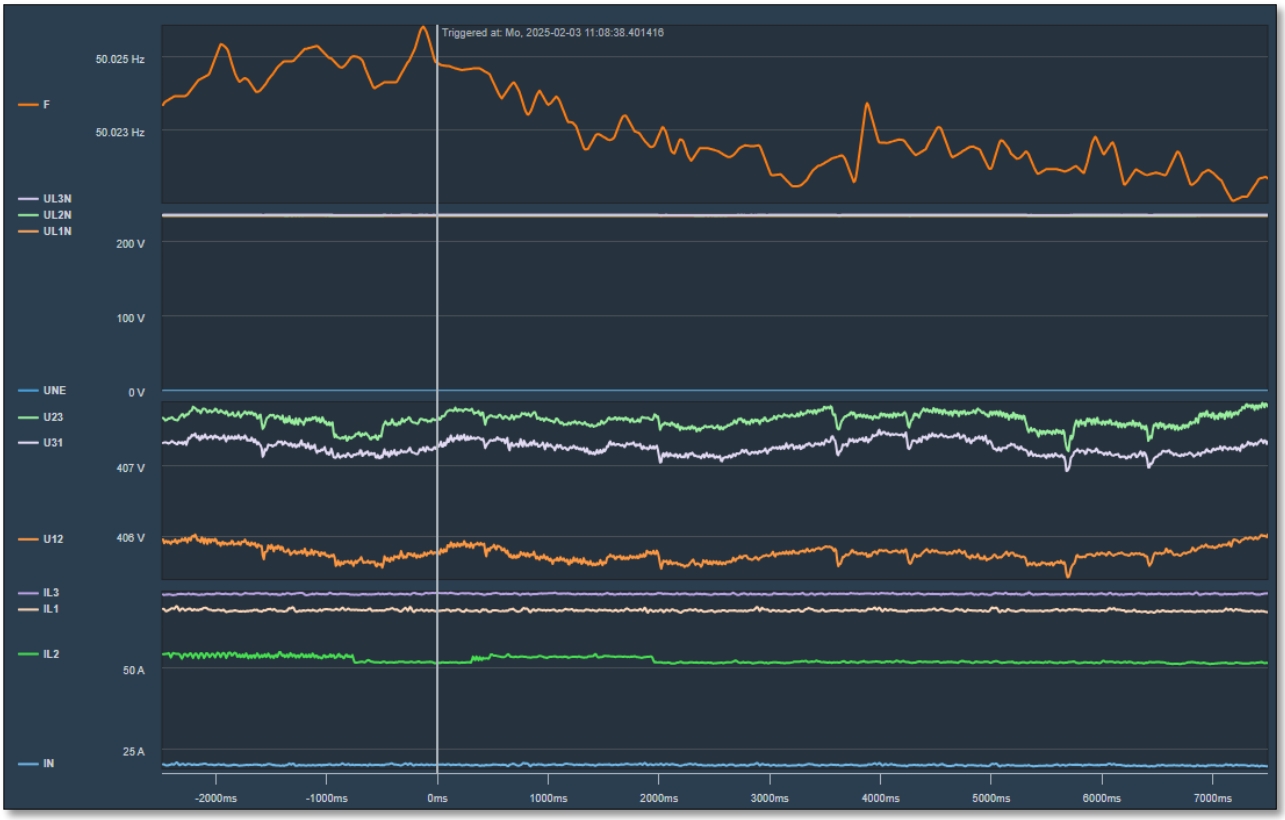

2.5 Recorder triggering

trigger quantity	lower	upper	step
r.m.s. phase voltages (T/2)	✓	✓	✓
r.m.s. phase-phase voltages (T/2)	✓	✓	✓
r.m.s. residual/neutral-ground voltage (T/2)		✓	✓
Positive sequence voltage (T/2)	✓	✓	
Negative sequence voltage (T/2)		✓	
Zero sequence voltage (T/2)		✓	
Phase voltage phase (T/2)			✓
phase voltages wave shapes (wave shape filter)	+/- threshold		
phase-phase voltages wave shapes (wave shape filter)			
residual/neutral-ground voltage wave shape (wave shape filter)			
r.m.s. phase currents (T/2)	✓	✓	✓
r.m.s. total / neutral current (T/2)		✓	✓
Power frequency (T/2)	✓	✓	✓
Binary inputs (debounced)	rising, falling slope		
Command	external		

2.6 PQ Events:

trigger quantity	lower	upper
voltage dip (T/2)	✓	
voltage swell (T/2)		✓
voltage interruption (T/2)	✓	
voltage rapid voltage change (T/2)	sliding average filter mean +/- threshold	
voltage change (10min)	✓	✓
voltage unbalance (10min)		✓
mains signalling voltage (150/180T)		✓
voltage harmonics (10min)		✓
voltage THD (10min)		✓
voltage short term flicker PST (10min)		✓
voltage long term flicker PLT (10min)		✓
power frequency (10s)	✓	✓

2.7 Online mode for direct readings

Measurement / Functions
Oscilloscopic recorder
Voltage and current harmonics n=2..50
Voltage and current interharmonics n=0..49
Voltage and current harmonics 2-9kHz
Frequency spectra up to 20 kHz of voltages and currents
Online streaming of all data classes and all measured values

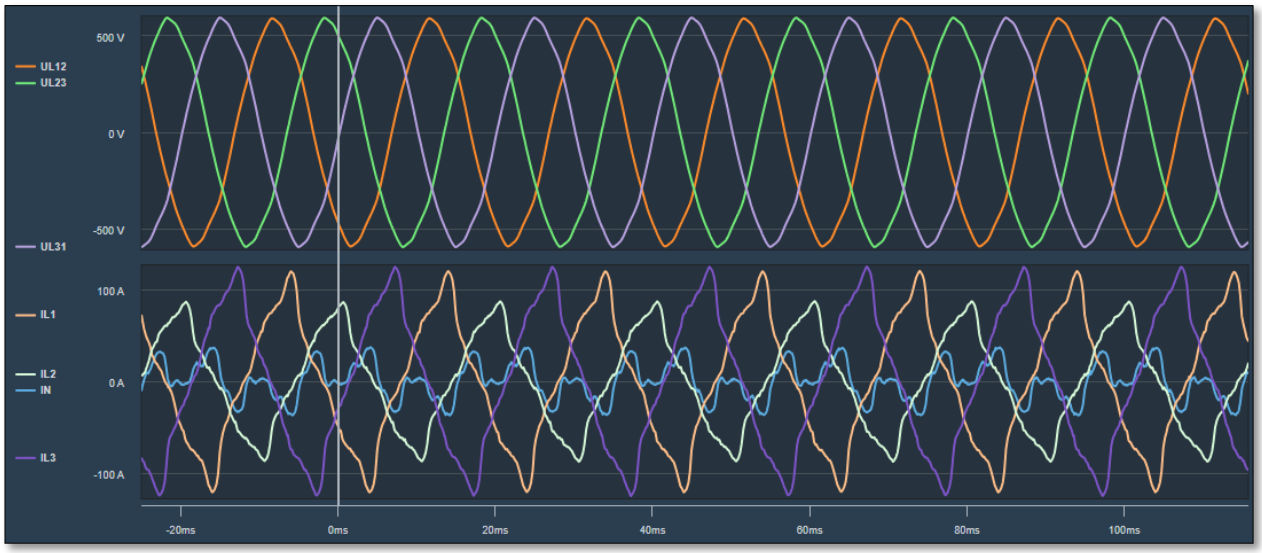

Live data

	L1	L2	L3	N
U	233.053 V	233.119 V	233.9 V	0.083 V
I	74.149 A	63.186 A	75.747 A	23.064 A
P	16.767 kW	14.305 kW	17.322 kW	48.394 kW
THD U	2.786 %	2.457 %	2.492 %	0 %
THD I	19.051 %	14.262 %	14.453 %	94.497 %

Frequency

50.002 Hz

Power

	L1	L2	L3	Total
S	17.714 kVA	14.746 kVA	17.684 kVA	50.13 kVA
Q	4.232 kVAR	3.468 kVAR	3.755 kVAR	11.41 kVAR
P	17.201 kW	14.333 kW	17.281 kW	48.814 kW
D	3.317 kVAR	2.202 kVAR	2.613 kVAR	8.132 kVAR
PF	0.971	0.972	0.977	0.974
cos(phi)	0.989 cap.	0.983 cap.	0.988 cap.	0.987 cap.

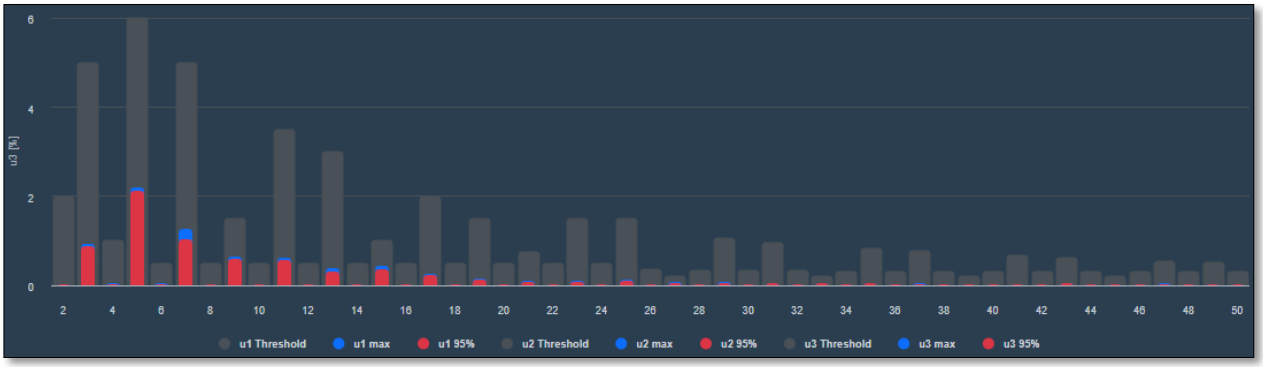

3. Order specifications *PQI-DA smart*

For determining the smart code ordering details:

- Only one unit can be ordered for codes with the same capital letter.

Characteristic	Code
Power Quality Interface and fault recorder • 4 voltage converters, 4 current transformers • In accordance with DIN EN-50160 and IEC 61000-4-30 (Class A) • 2 digital inputs • 2 relay outputs • WinPQ lite software for *PQI-DA smart*	*PQI-DA smart*
Supply voltage • AC 90 V..110 V..264 V or DC 100 V..220 V..350 V • DC 18 V...60 V...70 V	 H1 H2
Rated value of the input voltage • 100V 2MOhm (CAT IV 300V) • 100V / 400V / 690V 10MOhm (CAT IV 300V)	 E1 E2
Current inputs • 4 current inputs for metering circuit 1A/5A (range 10A) • 4 current inputs for protection circuit 1A/5A (range 100A) • 4 current inputs for Rogowski Coils • 4 AC current inputs for current clamps (0,5 V_{AC}) • 4 DC current inputs for current clamps (5,6 V_{DC})	 C30 C31 C40 C44 C45
Binary inputs • 2 programmable binary inputs (AC/DC 48..250V) • 2 programmable binary inputs (DC 10..48V)	 M1 M2
Option communication protocol • Modbus RTU & TCP • IEC 60870-5-104 or MQTT (RJ45) • IEC61850 (RJ45) • Modbus Master / Modbus Gateway incl. IEC60870-5-104 or MQTT	 P0 P1 P2 P3
Option IEC61000-4-7 (40,96kHz sampling) • 10,24kHz sampling; without 2kHz to 20kHz measurement • Frequency measurement of voltage and current from 2 kHz to 20kHz 40.96kHz sampling oscilloscope recorder	 B0 B1
Option Data format • Without PQDIF export function according to IEEE1159-3 • With PQDIF export function according to IEEE1159-3 Data transfer via feature P2 - IEC61850 / MMS	 F0 F1
Operating instructions • German • English • French • Spanish • Italian • Chinese	 G1 G2 G3 G4 G5 G6

3.1 Software for *PQI-DA smart*

Software WebPQ	Code
WebPQ database software incl. PostgreSQL database for fully automated processing and evaluation of power quality data in your IT environment! The basic versions always include 3 units – expandable via add-on. **Range of functions** – Automated readout of measurement data from the PQI-LV / PQI-DA smart and PQI-DE devices via SSH and CCCI interface – Web server for visualisation of measurement data and fault records in level - time diagrams / histograms / bar charts / pointer diagrams / ITIC / and more – Responsive live data display of one or more devices in parallel – Automated alarm management in the event of faults – Automated reports in accordance with EN50160 and IEC61000-2-2 / IEC61000-2-4 / IEC61000-2-12 switchable to up to 65 standard templates – Parameterisation and management of the measuring devices via the web server – IT security via a comprehensive user rights management system with audit logging, password policies, etc. – Visualisation of measurement data from PQI-D and PQI-DA devices – Integration of WinPQ in WebPQ to support PQI-D's – CSV and Comtrade export functionality	
WebPQ Licences ● WebPQ Basic incl. 3 units for a maximum of 30 units with basic functionality ● WebPQ Professional incl. 3 units for up to a maximum of 100 units with professional functionality ● WebPQ Enterprise incl. 3 units for systems > 100 units with enterprise functionality	 L.900.9266.10 L.900.9266.20 L.900.9266.30
● WebPQ FirstOrder 10 Units ● WebPQ FirstOrder 30 Units ● WebPQ FirstOrder 50 Units ● WebPQ FirstOrder 100 Units ● WebPQ FirstOrder 500 Units ● WebPQ FirstOrder 1000 Units	L.900.9266.1010 L.900.9266.1025 L.900.9266.2050 L.900.9266.2100 L.900.9266.3500 L.900.9266.3599
● WebPQ Add on "Fleetmanagement" – ● WebPQ Add on "Nequal-Export"	L.900.9265.32 L.900.9265.34
Extension of the number of units ● WebPQ Addon 10 Units ● WebPQ Addon 50 Units ● WebPQ Addon 100 Units	 L.900.9266.60 L.900.9266.61 L.900.9266.62
Maintenance Agreements ● WebPQ Annual maintenance agreement ● WebPQ One-time maintenance agreement	 L.900.9066.10.01 L.900.9066.10.02

3.2 *PQI-DA smart* Accessories

The accessories for the *PQI-DA smart* can be accessed directly via the link below or by scanning the QR code.

Link:

www.a-eberle.de/pqsys-accessories

QR-Code:

▶ **Note: When selecting the accessories, the corresponding hardware properties must be observed.**

A. Eberle GmbH & Co. KG

Frankenstraße 160
D-90461 Nuremberg

Tel.: +49 (0) 911 / 62 81 08-0
Fax: +49-(0)911-62 81 08 99
E-mail: info@a-eberle.de

http://www.a-eberle.de

Presented by:

_____

Copyright 2022 by A. Eberle GmbH & Co. KG
Subject to change without prior notice.

Version: 7/23/2025 1:34 PM