Operating Manual

Network Analyzer
PQ-Box 50

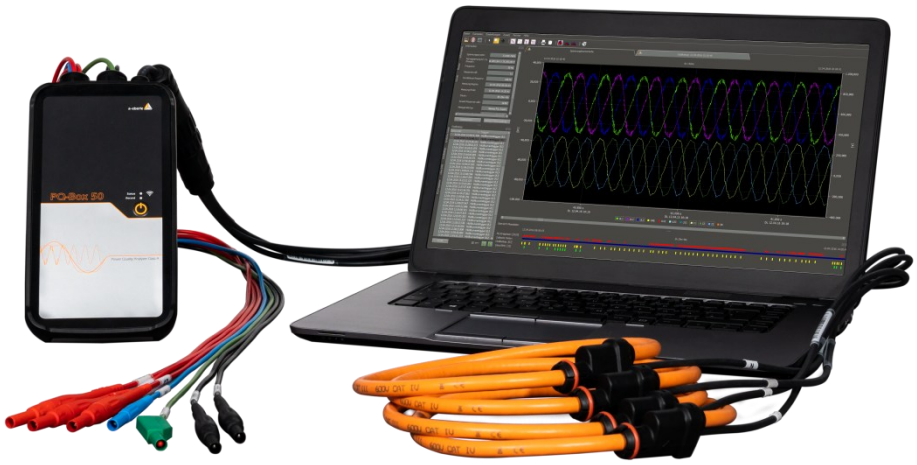

Available user manuals:

- Operating manual PQ-Box 50 Hardware (this print version)
- Operating manual WinPQ mobil Software (available as PDF download from our homepage via www.a-eberle.de or via WinPQ mobil software --> Help)

GB

Note:

Please note that this operating manual cannot describe the latest version of the device in all cases. For example, if you download a more recent firmware version from the internet, the following description may no longer be accurate in every point.

In this case, either contact us directly or refer to the most recent version of the operating manual, available on our website (www.a-eberle.de).

A. Eberle GmbH & Co. KG

Frankenstraße 160
D-90461 Nuernberg

Tel.: 0911 / 62 81 08 0
Fax: 0911 / 62 81 08 96
E-Mail: info@a-eberle.de
Internet: www.a-eberle.de

A.-Eberle GmbH & Co. KG cannot be held liable for any damage or losses, resulting from printing errors or changes to this operating manual.

Furthermore, **A. Eberle GmbH & Co. KG** does not assume responsibility for any damage or losses resulting from defective devices or from devices altered by the user.

Copyright 2019 by A. Eberle GmbH & Co. KG

All rights reserved.

Table of Contents

1. User Guidance ... 5
1.1 Target group ... 5
1.2 Warnings ... 5
1.3 Tips ... 5
1.4 Other Symbols ... 6
1.5 Applicable documentation ... 6
1.6 Keeping ... 6
1.7 Updated documentation ... 6
2. Safety Instructions ... 7
2.1 Safety instructions ... 7
2.2 Meaning of the symbols used on the device ... 8
3. Scope of Delivery/Order Codes PQ-Box 50 ... 9
3.1 Scope of Delivery ... 9
3.2 Order Codes ... 9
3.3 Technical data ... 11
4. Accessories for current measurement ... 13
4.1.1 Rogowski current clamps ... 13
4.1.2 Current clamps ... 14
4.1.3 Accessories for current measurement ... 16
5. Intended use ... 17
6. Description ... 17
7. Hardware PQ-Box 50 ... 18
7.1 PQ-Box 50 Hardware ... 18
7.2 Accumulator ... 20
8. Network connection PQ-Box 50 ... 21
8.1.1 Direct connection to a 3-phase low voltage network ... 21
8.2 Connection to a single-phase low voltage network ... 22
8.3 Connection to an isolated IT network ... 23
8.4 Connection to secondary transformer ... 24
8.5 Special circuit types ... 25
8.6 Starting a measurement ... 26
8.7 Memory management ... 26
8.8 Delete device memory ... 26
8.9 Storage requirements for measurement data ... 26
8.10 WLAN PQ-Box 50 – IP address ... 27

9. PQ-Box App 28
9.1 Connection to PQ-Box 28
10. Maintenance/Cleaning 29
11. Calibration 29
12. Disposal 29
13. Product Warranty 30

1. User Guidance

1.1 Target group

The User Manual is intended for skilled technicians as well trained and certified operators.

The contents of this User Manual must be accessible to people tasked with the installation and operation of the system.

1.2 Warnings

Structure of the warnings

Warnings are structured as follows:

⚠ SIGNAL WORD	**Nature and source of the danger.** Consequences of non-compliance. ● Actions to avoid the danger.

Types of warnings

Warnings are distinguished by the type of danger they are warning against:

⚠ DANGER!	Warns of imminent danger that can result in death or serious injuries if not avoided.

⚠ WARNING!	Warns of a potentially dangerous situation that can result in death or serious injuries when not avoided.

⚠ CAUTION!	Warns of a potentially dangerous situation that can result in fairly serious or minor injuries when not avoided.

NOTICE:	Warns of a potentially dangerous situation that if not avoided could result in material or environmental damage.

1.3 Tips

Tips on the appropriate device use and recommendations.

1.4 Other Symbols

Instructions

Structure of instructions:

✋ Guidance for an action.

→ Indication of an outcome, if necessary.

Lists

Structure of unnumbered lists:

- List level 1
  - List level 2

Structure of numbered lists:

1) List level 1
2) List level 1
   1. List level 2
   2. List level 2

1.5 Applicable documentation

For the safe and correct use of the product, observe the additional documentation that is delivered with the system as well as the relevant standards and laws.

1.6 Keeping

Keep the user manual, including the supplied documentation, readily accessible near the system.

1.7 Updated documentation

The most recent versions of the documents can be obtained at https://www.a-eberle.de/de/downloads.

2. Safety Instructions

2.1 Safety instructions

✋ Follow the operating instructions.

✋ Keep the operating instructions with the device.

✋ Ensure that the device is operated only in a perfect condition.

✋ Never open the device.

✋ When opening the battery compartment, disconnect the power supply.

✋ Ensure that only qualified personnel operate the device.

✋ Connect the device only as specified.

✋ Ensure that the device is operated only in the original condition.

✋ Connect the device only with recommended accessories.

✋ Ensure that the device is not operated outside the design limits. (See the technical data)

✋ Ensure that the original accessories are not operated outside the design limits.

✋ For measurements in short circuit resistant systems, ensure that voltage taps with integrated fuses are used.

✋ Do not use the device in environments where explosive gases, dust or fumes occur.

✋ Clean the device only with commercially available cleaning agents.

⚠ DANGER!	**Danger to life due to electric shock!** If the device is used in a way not specified by the equipment producer, the device protection will be impaired. ✋ Observe safety instructions

2.2 Meaning of the symbols used on the device

Nature and source of the danger! Read the safety instructions inside the manual!

Voltage ground

USB-interface

CE marking guarantees compliance with the European directives and regulations regarding EMC

The unit is fully protected by double or reinforced insulation.

IP65

6X = Protection against dust

Protection against water **X5** = Protection against water jets from any angle

AC voltage

DC voltage

CAT IV

Category IV

3. Scope of Delivery/Order Codes PQ-Box 50

3.1 Scope of Delivery

- PQ-Box 50
- User Manual
- Case
- 3 red dolphin clips, 1 blue dolphin clip, 1 green dolphin clip
- 3 high-load fuses integrated in voltage leads
- USB cable
- 2 voltage leads for integrated wide range power supply with 2 x 4 mm safety plugs and integrated high-load fuses

3.2 Order Codes

The following device options are available for the PQ-Box 150 device and can be activated at any time via a license code.

▶ **Optional "Ripple control recorder" (R1)**

- Used for triggering and recording ripple control signals for voltages and currents.

The PQ-50 Box is available in different versions:

▶ **PQ-Box 50 basic (B0)**

The device is suitable for performance analyses for energy audits according to ISO 50001, as a data logger for troubleshooting and for online measurements.

▶ **PQ-Box 50 light (B1)**

This version is equipped with manual trigger option for oscilloscope and ½ cycle RMS records. Standard evaluations according to EN50160, IEC61000-2-2/2-4 for public and industrial power systems are automatically generated.

▶ **PQ-Box 50 expert (B2)**

This version is additionally equipped with comprehensive trigger functions for oscilloscope and ½ cycle RMS records.

With a licence code, the PQ-Box 50 can be upgraded with ripple control recorder, B1 light or B2 expert.

Performance			
PQ-Box 50	**basic (B0)**	**light (B1)**	**expert (B2)**
Statistic EN50160/IEC 61000-2-2/IEC 61000-2-4		x	x
PQ-events		x	x
Recording free interval (1sec…30min):		x	
Voltage: min. max. average	x	x	x
Current: min. max. average	x	x	x
Power: P, Q, S, PF, cos phi, sin phi, tan phi	x	x	x
Distortion power D	x	x	x
Energy: P, Q, P+, P-, Q+, Q-	x	x	x
Flicker according IEC61000-4-15 (Pst, Plt, Pinst)		x	x
Unbalanced voltage, current	x	x	x
Voltage harmonics		up to 50th	up to 50th
Voltage harmonics extreme values 200ms			x
Current harmonics		up to 50th	up to 50th
Current harmonics extreme values 200ms			x
Phase angle of current and voltage harmonics			x
Real, apparent and reactive power of harmonics			x
THD voltage, current; PWHD, PHC	x	x	x
Inter harmonics – voltage, current			DC to 10 kHz
Ripple control signal		x	x
Frequency: min. max. average	x	x	*
Power / Energy Interval			
10/15/30 min interval – Voltage, P, Q, S, D, cos phi, sin phi …	x	x	x
Online mode:			
Oscilloscope recorder	x	x	x
½ cycle RMS recorder		x	x
Voltage & current harmonics, inter harmonics		x	x
FFT spectrum (U, I)			DC to 10kHz
Direction of harmonics			x
Trigger options:			
½ cycle RMS recorder (U, I, P, Q, S, frequency)			x
Oscilloscope recorder (U, I)			x
Phase shift trigger, wave shape trigger			x
Interval-trigger			x
Automatic trigger			x

With a licence code, the PQ-Box 50 can be upgraded from lower version to a higher version.

3.3 Technical data

PQ-Box 50 (4U/4I)	
4 voltage inputs (AC/DC): Maximum input voltage:	L1, L2, L3, N, E; DC 848V ⎓ AC 1039V L-L AC 600V L-E 1.2 MΩ impedance
4 current inputs (AC/DC):	1000 mV input for mini clamp and 330 mV for Rogowski coils 15 kΩ impedance
Sampling rate:	20.48 kHz at 50 Hz/60 Hz
Automatic synchronization to fundamental oscillation:	45 Hz to 65 Hz
Measurement intervals:	Freely adjustable from 1 s to 30 min + 10/15/30 min
Data memory:	1 GB
Interfaces:	WLAN/WiFi, USB
Time synchronization:	NTP with WLAN
Dimensions:	220 x 110 x 40 mm
Mass:	1 kg
Degree of protection:	IP65
IEC 61000-4-30 Ed.3:	Class A
Accuracy:	< 0,1 %
Insulation class:	CAT IV / 600 V
Insulation test	Impulse voltage = 12,8 kV 5 sec = 7,4 kV rms
A/D converter:	16 Bit
Climate/temperature proof:	Function: -20° ....45°C Storage: -30°....80°C
Power supply:	AC 100 V...440 V ~ OVC IV 50/60Hz; 180..80mA oder DC 100 V...250 V ⎓; 105...35mA 440V CAT IV

EMC	
CE- conformity ● Interference immunity – EN 61326 – EN 61000-6-2 ● Emittedinterference – EN 61326 EN 61000-6-4	
ESD IEC 61000-4-2 IEC 60 255-22-2	8 kV / 16 kV
Electromagnetic fields IEC 61000-4-3 IEC 60 255-22-3	10 V/m
Burst IEC 61000-4-4 IEC 60 255-22-4	4 kV/2 kV
Surge IEC 61000-4-5	2 kV/1 kV
HF conducted disturbances – IEC 61000-4-6	10 V, 150 kHz ... 80 MHz
Voltage dips – IEC 61000-4-11	100 % 1 min
● Housing at a distance of 10 m	30...230 MHz, 40 dB 230...1000 MHz, 47 dB
● AC supply connection at a distance of 10 m	0.15...0.5 MHz, 79 dB 0.5...5 MHz, 73 dB 5...30 MHz, 73 dB

Measurement quantity	Error limits according IEC 61000-4-30, Class A
Fundamental oscillation: r.m.s.	±0.1% of U_{din} over 10% ~ 150% of U_{din}
Fundamental oscillation: Phase	± 0.15° over 50% ~ 150% of U_{din} over f_{nom} ±15%
2nd ... 50th harmonic	±5% of display over U_m = 1% ~ 16% of U_{din} ±0.05% of U_{din} over U_m < 1% of U_{din}
2nd .... 49th interharmonic	±5% of display over U_m = 1% ~ 16% of U_{din} ±0.05% of U_{din} over U_m < 1% of U_{din}
Frequency	± 5mHz over f_{nom} ±15% (f_{nom} = 50 Hz / 60 Hz)
Flicker, Pst, Plt	±5% of display over 0.02% ~ 20% of ΔU / U
Dip residual voltage	±0.2% of U_{din} over 10% ~ 100% of U_{din}
Dip duration	±20 ms over 10% ~ 100% of U_{din}
Swell residual voltage	±0.2% of U_{din} over 100% ~ 150% of U_{din}
Swell duration	±20 ms over 100% ~ 150% of U_{din}
Interruption duration	±20 ms over 1% ~ 100% of U_{din}
Voltage asymmetry	±0.15% over 1% ~ 5% of display
Ripple control voltage	±5% of display over U_m = 3% ~ 15% of U_{din} ±0.15% of U_{din} over U_m = 1% ~ 3% of U_{din}

4. Accessories for current measurement

- Standard accessories are automatically recognized by the meter.
- The conversion factor is automatically adjusted for the connected accessory.

4.1.1 Rogowski current clamps

- **Rogowski current clamp 4~: Ident-No. 111.7001**
- **Rogowski current clamp 4~: Ident-No. 111.7006**

Model 111.7001/6

Model	111.7001 Pro Flex 3000 4~	111.7006 Pro Flex 6000 4~
Current range	3,000 A AC RMS	6,000 A AC RMS
Measurement range	0-3300 A AC RMS	0-6,600 A AC RMS
Output voltage	85 mV / 1000 A	42.5 mV / 1000 A
Frequency range	10 Hz to 20 kHz	10 Hz to 20 kHz
Isolation voltage type	600 V AC / DC CAT IV	600 V AC / DC CAT IV
Accuracy **(20 °; 50 Hz)**	<50 A/0.1 % of the full scale value 50-3000 A/1.5 % of the measured value	<100 A/0.1 % of the full scale value 100-6000 A/1.5 % of the measured value
Angle error **(45-65 Hz)**	<50 A/2.5 ° 50-3000 A/1 °	<100 A/2.5 ° 100-6000 A/1 °
Position accuracy	<50 A/0.2 % of the full scale value 50-3000 A/1.5% of the measured value	<100 A/0.1 % of the full scale value 100-6000 A/1.5% of the measured value
Long Rogowski coils	610 mm	910mm
Diameter clamp head	9,9mm	9,9mm

- **Mini- Rogowski current clamp 4~: Ident-No. 111.7085**

Current range: 500A RMS; Accuracy: 1%
Rogowski clamp length = 220mm;
Diameter = 70mm; Rogowski clamp head = 6mm
Frequency range: 10Hz to 50kHz

4.1.2 Current clamps

The MU-metal clamp is especially applicable for small current measurements on secondary transformers in medium- and high-voltage networks. High accuracy and small angle errors are combined.

- **Mu-Metal Mini-Current clamps 3~: Ident-No. 111.7003**

Current range: 10mA to 20A

Frequency range: 40Hz to 20kHz

- **Mu-Metal Mini-Current clamps 4~: Ident-No. 111.7015**

Current range: 10mA to 20A/200A AC RMS (two ranges)

Frequency range: 40Hz to 20kHz

Model 111.7015

Measurement range	20 A measurement range	200A measurement range
Current range	20 A AC RMS	200 A AC RMS
Measurement range	100 mA to 20 A RMS	1 A to 200 A RMS
Output voltage	10 mV/A	1 mV/A
Frequency range	40 Hz to 20 kHz	40 Hz to 20 kHz
Isolation voltage type	600 V AC	600 V AC
Accuracy	100 mA- 10 A/1.5 % of the measured value 10-20 A/1 % of the measured value >20 A/1% of the measured value	10-40 A/<2 % of the measured value 40-100 A/<1.5 % of the measured value 100-200 A/<1 % of the measured value
Angle error	100 mA- 10 A/2 ° 10-20 A/2° >20 A/2°	10-40 A/<2 ° 40-100 A/<1.5 ° 100-200 A/<1 °

200 A Measurement range (111.7015)

Adjustment of the power converter factor to x10. For the clamp with two ranges the automatic factor detection of the PQ-Box does not work for the second.

▶ Mu-Metal Mini-Current clamp 0…5A 1~: Ident-No. 111.7043

Current range: 5mA to 5A AC RMS

Frequency range: 40Hz to 20kHz

Free current adapter set necessary

▶ AC/DC Current clamp 1~: Ident-No. 111.7094

AC/DC hall sensor clamp. Set with power supply and 2 pcs. 4mm connectors

Current range 60A/600A (two ranges)

Model 111.7094

Measurement range	AC/DC 60 A	AC/DC 600 A
Current range	60 A DC / 40A AC RMS	600 A DC / 400A AC RMS
Measurement range	200 mA to 60 A RMS	600 A RMS
Output voltage	10 mV/A	1 mV/A
Frequency range	DC to 10 kHz	DC to 10 kHz
Isolation voltage type		
Accuracy	0.5-40 A/<1.5 % +5 mV 40-60 A/1.5 %	0.5-100 A/<1.5 % +1 mV 100-400 A/<2 % 400-600 A(DC only)/<2.5 %
Angle error	10-20 A/<3 ° 20-40 A/<2.2 °	10-300 A/<2.2 ° 300-400 A/<1.5 °

600 A Measurement range (AC/DC)

✋ Adjustment of the power converter factor to x10

4.1.3 Accessories for current measurement

- **Free Adapter set for connecting 4 clamps: Ident-No.: 111.7004**

Adapter set for connecting 4 clamps or shunt with 4mm connectors. 2m length

⚠ CAUTION!	**Damage to the device from external current clamps**
	✋ Do not use clamps with A or mA output
	✋ Avoid input voltages at the current inputs greater than 30 V

Power conversion factor

Current conversion correction factor; the default is 1 A/10 mV

Example:

If you use a current clamp with a 500 A to 500 mV range, it is necessary to change the CT ratio in the setup of the device to “10x”.

- **Current clamp cable extension: Ident-No.: 111.7025**

Cable extension 5 m for current clamps or Rogowski coils.

- **Current-shunt 2A: Ident-No.: 111.7055**

Measurement of AC- and DC-currents. Current range = 2A / 200mV output signal

5. Intended use

The product is exclusively designed for the measurement and evaluation of voltages and currents. The current inputs are mV-inputs.
✋ Observe safety instructions
✋ Ensure that the device is not operated above the rated data

6. Description

The Network Analyzer PQ-Box 50 is suitable for analysis in low, medium and high-voltage networks. It meets all the requirements of the measurement equipment standard IEC61000-4-30 Ed. 3 class A.

Functions:

→ Voltage quality measurements according to EN50160, IEC61000-2-2 and IEC61000-2-4 for low and medium voltage networks

→ Fault recorder functions

→ Load analyses; energy measurements

→ Ripple control signal analysis

7. Hardware PQ-Box 50

7.1 PQ-Box 50 Hardware

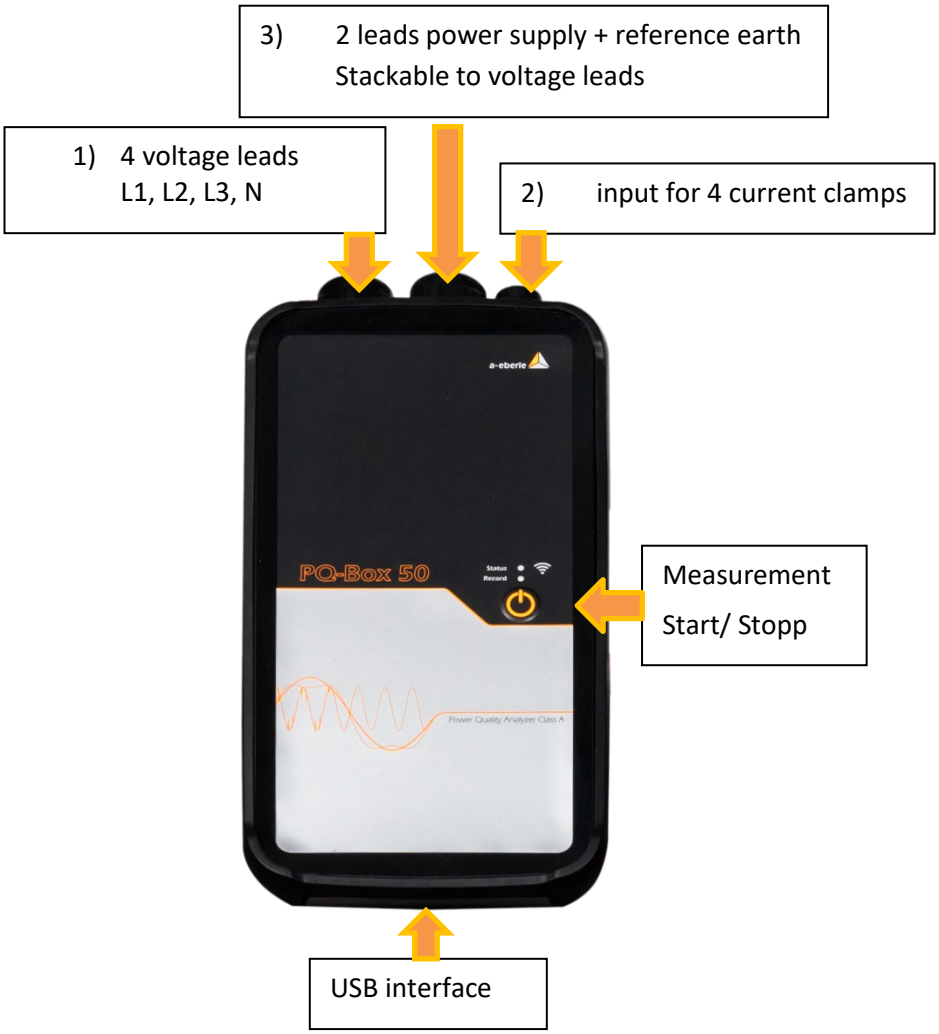

WLAN/Wifi Interface

1) 5 voltage leads fix connected:

L1 (red - L1)

L2 (red - L2)

L3 (red - L3)

N (blue - N)

Earth (green - E)

The housing cover can be opened by the user.
Here is a battery pack.
This can be exchanged by the user if necessary.

⚠ DANGER!	**Danger to life due to electric shock!** The maximum voltage of the reference earth (green) must not exceed the requirement of 600V against earth ✋ Ensure that the device is not operated above the rated data

⚠ CAUTION!	**Damage to measurement voltage with overvoltage** ✋ Connect device to maximum DC voltage of 565V AC / 800V DC L-N. ✋ Connect device to maximum AC voltage of 980V AC / 1380V DC L-L.

2) Current clamp connection (Amphenol plug 7-pole)

3) The PQ-Box 50 is equipped with an internal extremely robust wide-range power supply. The power supply is designed for the high immunity of 300V CAT IV and complies with the protection class IP65.
The PQ-Box can be supplied with energy directly at the measuring point via this adapter and does not require a separate socket.
The following voltage ranges for the mains supply are possible: 88 V ... 500 V AC or 100V ... 300V DC
High-voltage fuses are installed in both measuring lines. These can be exchanged by the user.

⚠ CAUTION!	**Damage to power supply due to under- or overvoltage** ✋ Only power the device between 88V and 500V AC. ✋ Only supply power between 100 and 300 V DC. ✋ Do not supply the device directly from strongly disturbed voltages. (eg. at the frequency inverter output / Caution high clock frequencies can destroy the internal power supply)

⚠ DANGER!	**Danger to life due to electric shock!** Only fuse 6.3mm x 32mm, 3 A F, with a breaking capacity of 50kA/600V may be used in the fuse carrier. Only fuses with the identical data may be used. ✋ Make sure that the fuses used comply with the specifications.

Front panel picture – keypad

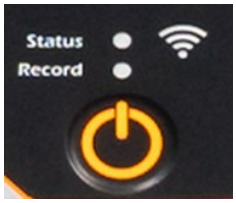

LED display

Measurements are started and stopped via a "Start / Stop" button. If a recording has been started, this will be indicated by a flashing recorder LED.

LED Status	
Off	Device turned off.
Continuous green	Ready for Push-Button.
Continuous orange	Command processing.

LED Record	
Off	Messung nicht gestartet.
Flashing green	Recorder running.
Continuous green	Memory full. Recorder is stopped!

WLAN Status	
Off	Device is ready for connection
Continuous green	PQ-Box is connected to a device via WLAN.

Many measurements can be recorded one after the other without having to read the instrument beforehand. A glowing WLAN icon indicates if this interface is active and accessible.

7.2 Accumulator

The PQ-Box 50 is equipped with a lithium-ion battery and intelligent charging electronic.
The aim is to achieve a long battery life time. At 80% capacity, the PQ-Box can run approximately 2 hours without mains supply.
The Li-ion battery is first charged to 100% when the threshold (75%) is reached. This has a very positive effect on the total life time of the batteries.
Aging: At high temperature and the battery is full, the cell oxidation developed particularly rapidly. This condition may occur, f. e. in notebooks when the battery is fully charged and at the same time, the device is in operation. The optimal charge level is between 50% and 80% during storage.

- Charging stops when exceeding a battery temperature of 50 ° C
- Start charging only when the battery temperature is less than 45 ° C
- Warning Battery capacity below 7%
- PQ-Box shutdown when battery capacity <5%

We recommend storing the battery of the PQ-Box at 15 ° C with a charge of 60% - this is a compromise between accelerated aging and self-discharge. The battery of the PQ-Box should be recharged to approximately 55-75% every six months, due to the natural self-discharge, in order to ensure a long-term service life.

8. Network connection PQ-Box 50

8.1.1 Direct connection to a 3-phase low voltage network

Connection in a 3-phase 4-wire AC network

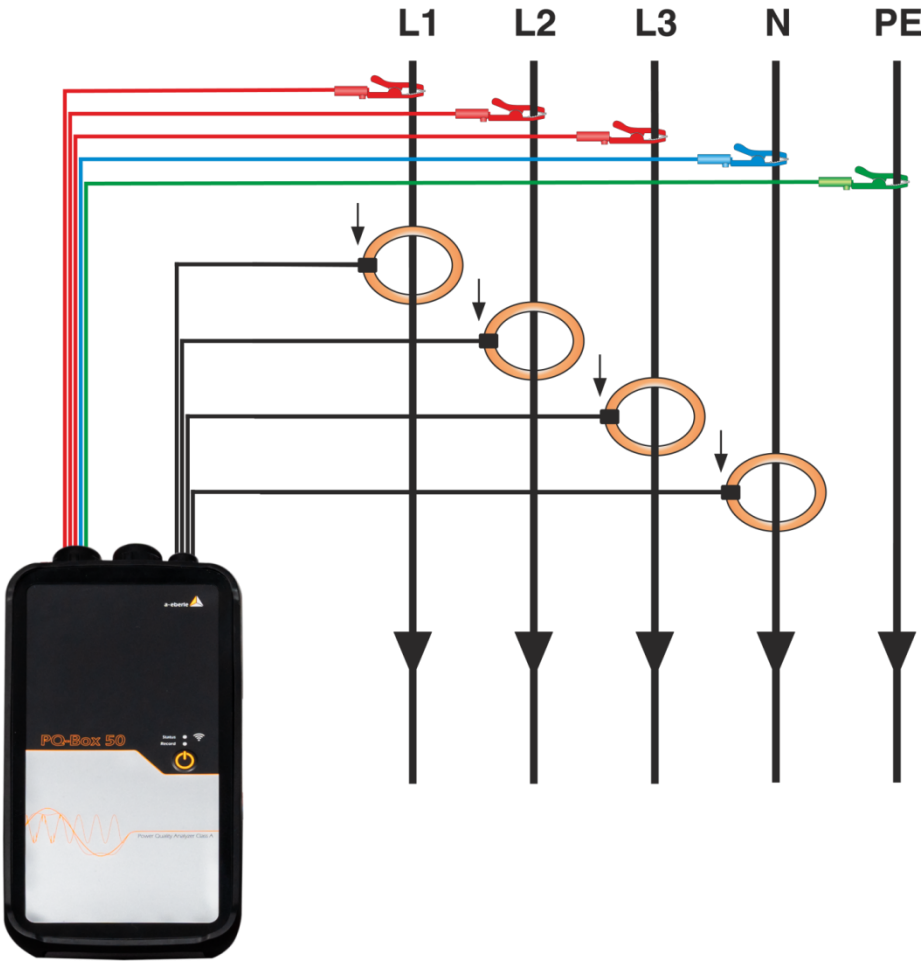

Voltage connection

- Ensure that voltage measurement cable PE is connected for every measurement.
- If no PE connection is available, connect E and N together.
- Ensure that switching (4-wire) is selected. (Setting via display or software)

8.2 Connection to a single-phase low voltage network

Connection for single-phase measurements

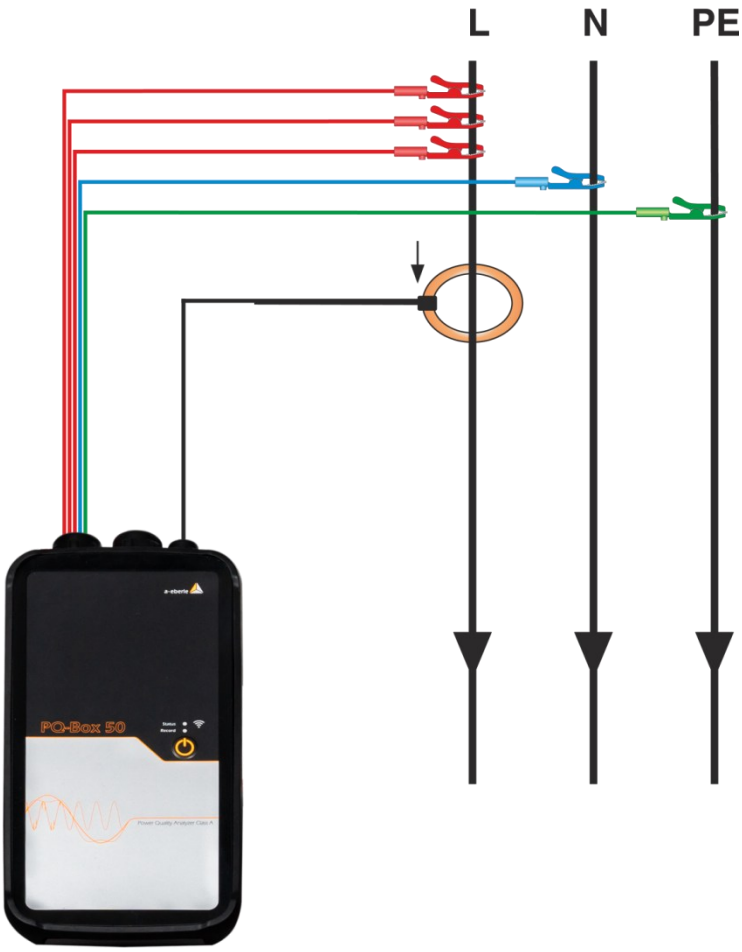

Voltage connection

- Ensure that voltage measurement cable E is connected for every measurement.
- If no PE connection is available, connect E and N together.
- Ensure that switching “1-wire system” is selected. (Setting via PQ-Box App or software)

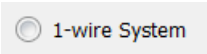

- Not necessary to connect phases L2 and L3 for voltage and currents in single phase measurement.

8.3 Connection to an isolated IT network

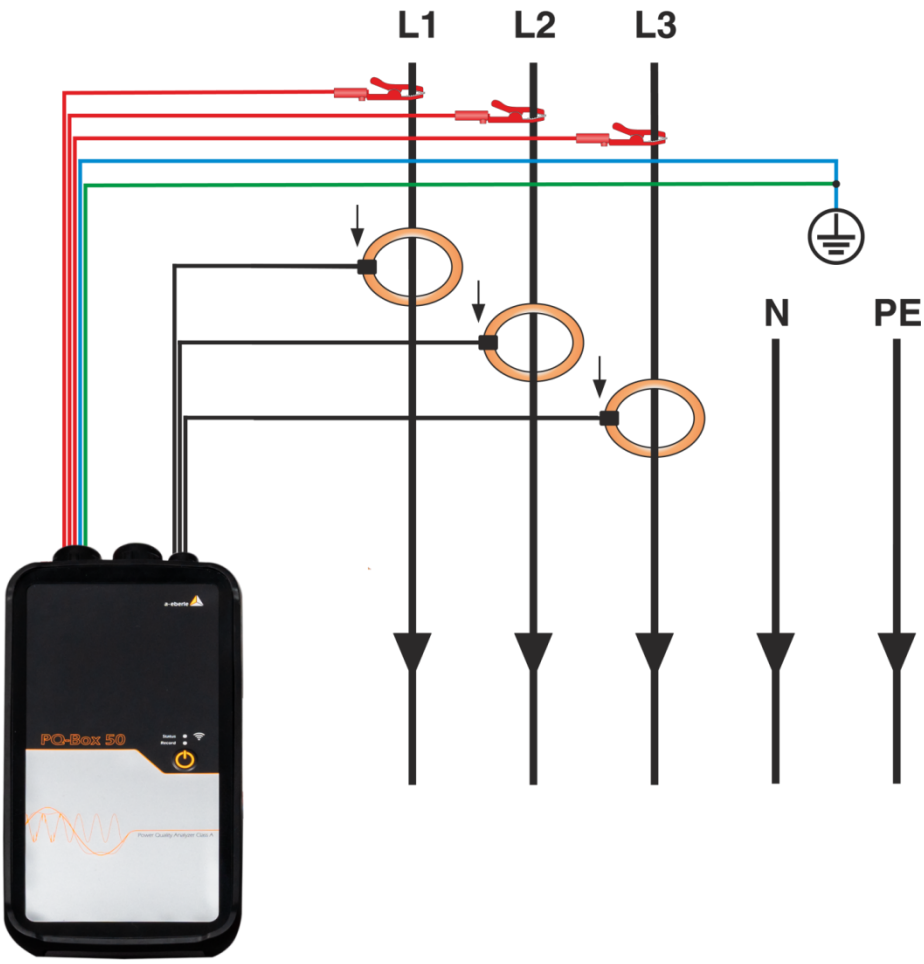

Connections

- Connect terminals E and N together and connect it to a ground potential.
- Ensure that switching (3-wire) is selected. (Setting via display or software)

The input impedance of a measuring input is 1,2 mega ohms.

If the high-resistance ground connection is not desired, it is also possible to interconnect the terminals E and N and to hang open. (No connection to any ground)

In 3-wire connection the 4th voltage channel and the 4th current channel will be calculated from the device. (Voltage Neutral to Ground and current of the star point)

8.4 Connection to secondary transformer

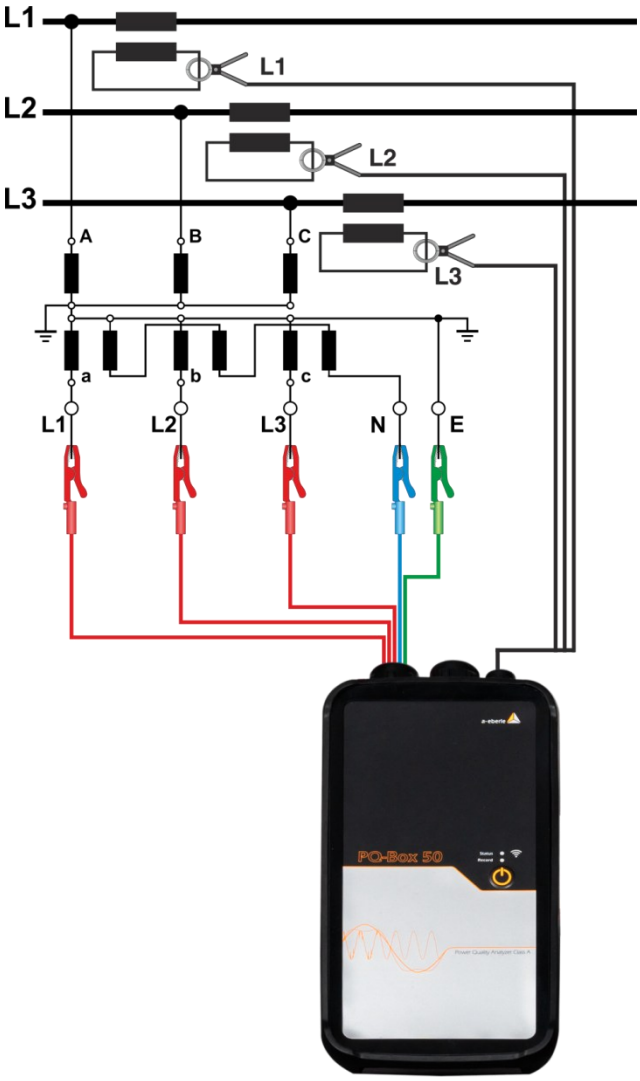

Connections

- Ensure that voltage measurement cable E is connected for every measurement.
- If no PE connection is available, connect E and N together.
- Ensure that switching (3-wire) is selected. (Setting via display or software)
- Set the voltage transformer ratio
- Enter the nominal conductor-conductor voltage
- Set the current transformer ratio

In 3-wire connection the 4th voltage channel and the 4th current channel will be calculated from the device. (Voltage Neutral to Ground and current of the star point)

8.5 Special circuit types

Configurations such as a V connection or aron connection can be parameterized.

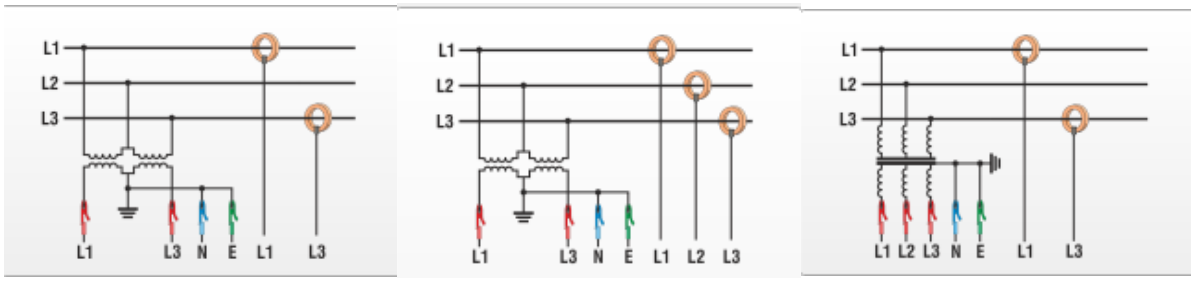

- V connection (parameterization through the evaluation software or device setup)
- Aron connection (parameterization through the evaluation software or device set-up)

Isolated networks

Connections

✋ Connect voltage measurement conductors E and N to ground

✋ If this is not desired in the plant due to isolation monitoring, the E and N connections can be connected together and remain free without connection.

✋ Ensure that switching (3-wire) is selected.

✋ Set the voltage transformer ratio

✋ Enter the nominal conductor-conductor voltage

✋ Set the current transformer ratio

8.6 Starting a measurement

Press the 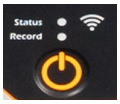

key to stop or start measuring.

- Recording "On" is indicated by green flashing light "Record"
- Recording stopped - LED record is off
- Memory PQ-Box 50 full - LED record and status light permanently.

The recording is stopped.

- Attempt to start a measurement when the memory is full - Status LED changes to orange and Recorder LED flashes 2 x at a time.

8.7 Memory management

So that the recorder data does not fill the whole memory when a too sensitive or incorrect trigger level is set and thus the long-term recording is stopped, at the start of the measurement the PQ-Box 50 reserves a maximum size of the free space for all fault records.

8.8 Delete device memory

Using a key combination at the start of the device, it is possible to completely erase the device memory.

- Establish power supply to the PQ-Box 50
- Orange LED lights up
- Now press the start button until orange LED and green LED flash together
- If the start button is pressed within 3 seconds, the device memory will be erased and the PQ-Box 50 will start. If the start button is not pressed, PQ-Box will start without clearing the memory.

8.9 Storage requirements for measurement data

Storage requirements for long-term measurement data:
Example PQ-Box 50:

- 1 sec measurement interval generates approx. 30MB of data per hour
- 10 min measurement interval generates approx. 12 MB of data per week

Events and fault records have to be added to this amount of data. The amount of data is dependent on the occurrence of these events and the trigger settings of the measuring device.

8.10 WLAN PQ-Box 50 – IP address

The name of the WLAN router shown in the network for PQ-Box 50 is:

„PQBoxAP_*serial number*“, for example: for „SSID: PQBox50AP_1804-204

For connection you have to enter the WPA2 Key on your PC or mobile phone. SSID and password for a WPA2 connection can be found on the nameplate of the network analyzer (Example: for „SSID: PQBox50AP_1804-204“ the password would be „1804-204“).

The WLAN IP address of the PQ-Box 50 is pre-set to 172.168.2.4 and cannot be parameterized.

Older devices with a serial number lower than 2302-xxx have the IP address 192.168.2.4

9. PQ-Box App

Via an app for Android and IOS operating systems, all PQ-Boxes with integrated WLAN/Wifi interface can be operated wirelessly. The app is available for free download in the Apple App Store as well as in the Google Play Store.

A variety of online screens are available. All measuring devices can also be easily parameterized, e.g. via a smartphone. A detailed parameterization of the PQ-Box (trigger limits, ripple control signal analysis, ...) is only possible via the WinPQ mobil software.

9.1 Connection to PQ-Box

The PQ-Box acts as a WLAN router. SSID and password for a WPA2 connection can be found on the nameplate of the network analyzer (Example: for „SSID: PQBox50AP_1804-204“ the password would be „1804-204“).

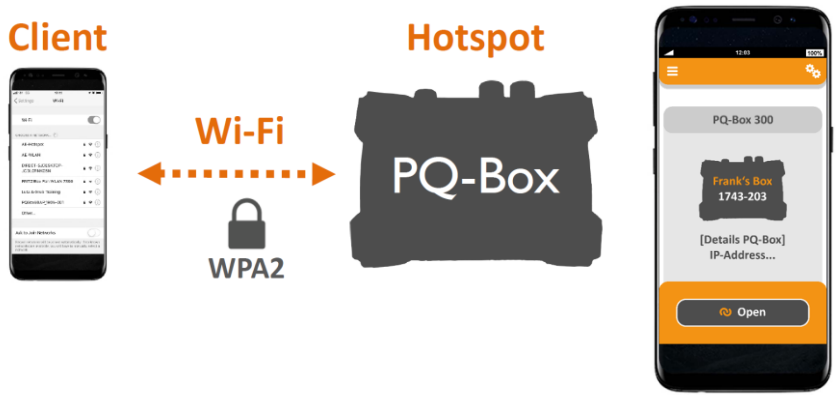

If the PQ-Box 50 is already connected to a device via WLAN, the WLAN symbol lights up green. Only one device (mobile phone or notebook) can connect to the PQ-Box at a time.

10. Maintenance/Cleaning

This unit is maintenance-free for customers.

Exceptions are the battery pack and micro-SD card, which can be accessed via the rear panel. The fuses are in the voltage leads.

- Remove the rubber protective cover,
- open the housing cover by unscrewing the 4 screws on the back.

Spare parts no.

Replacement battery pack	570.0015
Fuse for voltage leads; 500mA (FF) 50kA AC/DC; 600V 6,3mmx32mm	582.1058

⚠ DANGER!	**Danger to life due to electric shock!** ✋ Do not open the unit. ✋ Maintenance of the equipment can only be carried out by A-Eberle.

For service, contact A-Eberle.

Service address:

A. Eberle GmbH & Co. KG

Frankenstraße 160

D-90461 Nuremberg

11. Calibration

We recommend a calibration interval of three years for the PQ-Box 50 network analyser in order to maintain the accuracy required by IEC 61000-4-30 for Class A measuring devices. The devices are adjusted and calibrated at the premises of A. Eberle GmbH & Co. KG.

12. Disposal

To dispose of the device and its accessories, send all components to A-Eberle.

13. Product Warranty

- A-Eberle guarantees that this product will remain free of defects in material and workmanship for a period of three years from the date of purchase.
- For accessories like current clamps and the battery the period is one year.
- This warranty does not cover damage caused by accident, misuse or abnormal operating conditions.

To obtain service during the warranty period, please contact A-Eberle GmbH & Co KG in Nuremberg.

The detailed conditions for the warranty can be found in our terms and conditions:

https://www.a-eberle.de/agbs

PQ-Box 50
Information

WinPQ mobil
Software

Video-Tutorials
PQ-Box & WinPQ mobil

A. Eberle GmbH & Co. KG

Frankenstraße 160
D-90461 Nuremberg

Tel.: +49-(0)911-62 81 08-0
Fax: +49 (0) 911 / 62 81 08-99
E-Mail: info@a-eberle.de

http://www.a-eberle.de

No. 584.0871

Vers. PQ-Box 50 – 07.11.2025